SUNPOWER TECHNOLOGY CORP.
16F.-1, No.150, Jian 1st Rd., Zhonghe Dist., New Taipei City 235, Taiwan (R.O.C.).
TEL: 886-2-8226-3100 FAX: 886-2-8226-3111
http://www.sunpower.com.tw
E-mail: sunpower@sunpower.com.tw

SPS-750P-xx Series

750W, Single Output
Active P.F.C Function

275x125x63 mm
10.83 x 4.92 x 2.48 inch

Features:

- ∗ Universal AC input with active power factor correction, P.F.>0.95
- ∗ High reliability and high efficiency up to 90%
- ∗ Constant current design suits for inductive load and capacitive load.
- ∗ Inrush current limit soft start function
- ∗ Over voltage、over load ＆ short circuit、over temperature protection
- ∗ Output voltage ±10% adjustment
- ∗ Output voltage remote sense & Remote Control ON/OFF
- ∗ With power good signal output
- ∗ Current sharing function, 2+1 up to 2250W
- ∗ Built-in 12V/0.1A auxiliary output
- ∗ UL, cUL, TUV, CB, CE approved
- ∗ 3 years warranty

Specification:

INPUT	**Voltage**	90V ~ 264VAC universal full range or 127V ~ 375VDC.						
	Frequency	47 ----- 63 Hz						
	Current	<9.8A@100VAC input, full load condition						
	Inrush Current	<50A@115V , <90A@230V AC input, Cold start at 25℃ ambient						
	Leakage Current	<1.5mA@264V AC input						
	Power Factor	PF ＞ 0.95						
OUTPUT	**MODEL No.**	SPS-750P-05	SPS-750P-12	SPS-750P-15	SPS-750P-24	SPS-750P-30	SPS-750P-36	SPS-750P-48
	Voltage	5V	12V	15V	24V	30V	36V	48V
	Min Load	0A	0A	0A	0A	0A	0A	0A
	Max Load	120A	62.5A	50A	31.3A	25A	21A	15.8A
	Output Tolerance ②	± 2%	± 1%	± 1%	± 1%	± 1%	± 1%	± 1%
	Ripple Noise MAX. ③	120mV	120mV	120mV	200mV	200mV	220mV	240mV
	Efficiency (TYP.)	80%	88%	88%	88%	89%	89%	90%
	Output MAX.	600W	750W	750W	751W	750W	756W	758W
PROTECTION	**Over Voltage**	5.8~7.0V	13.8~16.8V	17.3~21.0V	27.6 ~ 33.6V	34.5~42.0V	41.4~50.4V	55.2~67.2V
		Shutdown and latch off, recover after re-start up.						
	Over Load & Short Circuit	When power supply over 105%~ 135% max load or short circuit acted, power supply will be shutdown and recover automatically after the fault is removed.						
	Over Temperature	Over 95℃± 5℃ Shutdown, recovers automatically after fault condition has been removed.						
ELEC. CHAR.	**Rise time**	<40mS						
	Hold up time	≧16mS@230V, full load condition						
	Setup time	<1.5S@230V AC						
	Remote Control	Please see the application manual						
	Remote sensing	(RS+, RS-).						
	Power good signal	High level TTL signal release, Please see the application manual						
	Auxiliary power	12V / 0.1A (Only for remote control ON/OFF)						
ENVIRONMENT	**Temperature** ④	Operating: -20 ~ +70℃ ; De-rating: 50 ~ 70℃: 2.5%/℃ ; Storage: -40 ~ +85℃						
	Humidity	Operating: 20% ~ 90% RH (non condensing) ; Storage: 10% ~ 95% RH (non condensing)						
SAFETY	**Withstand voltage**	I/P-O/P:3KVAC, I/P-PE:1.5KVAC, O/P-PE:0.5KVAC, 1minute						
	Isolation resistance	I/P-O/P, I/P-PE, O/P-PE ＞100MΩ/500VDC at 25℃/ 70% RH						
	Safety standard	UL 60950-1 2nd,CSA C22.2 No. 60950-1- 07 2nd,TUV EN 60950-1:2006,IEC 60950-1:2005, approved						
EMC	**EMI**	EN 55022 CLASS B、FCC CFR 47 PART 15 CLASS B						
		Compliance to EN61000-3-2 CLASS D, EN61000-3-3						
	EMS	EN 55024：EN 61000-4-2,3,4,5,6,8,11						
OTHERS	**Cooling**	Forced airflow cooling with DC fan.						
	M.T.B.F.	107 K hours						
	Dimension	275x125x63 ㎜ (L*W*H)						
	Packing	N.W.:3.5 Kg / 1pc; 3pcs / 1.22 CUFT / 1 CTN						
NOTE	① All measurements which not mentioned are based on 230VAC input, **output Max** at ambient 25℃ / 70%RH ② Output tolerance included set up voltage, line regulation and load regulation. ③ Ripple & noise are measured at 100～254VAC input with 10～50℃ condition and 20MHz of bandwidth by using a 10″ ～15″ twisted pair-wire terminated with a 0.1uF & a 47uF parallel capacitor. ④ The operating temperature shall follow the de-rating curve in spec The output load may be requested for decreasing as de-rating curve in spec when low input voltage is under 100VAC.. ⑤ The power supply is considered a component of end-equipment. The end-equipment must be re-confirmed whether comply with EMC directives.							

Copy Right Sunpower Technology Corp. 2009, All Rights Reserved.
Specifications subject to change without notice.

SUNPOWER TECHNOLOGY CORP.
16F.-1, No.150, Jian 1st Rd., Zhonghe Dist., New Taipei City 235, Taiwan (R.O.C.).
TEL: 886-2-8226-3100 FAX: 886-2-8226-3111
http://www.sunpower.com.tw
E-mail: sunpower@sunpower.com.tw

SPS-750P-xx Series

Block Diagram：PS9

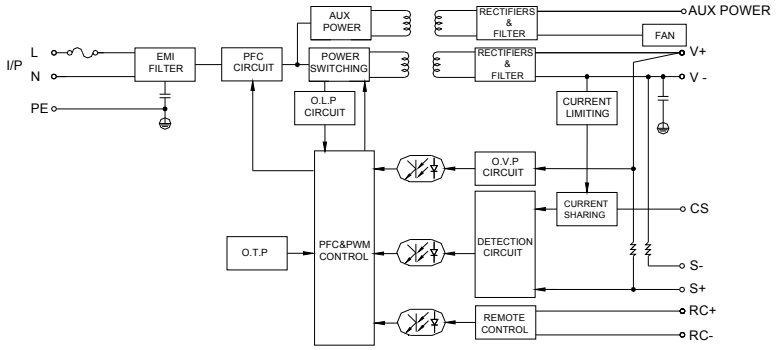

De-rating Curve：

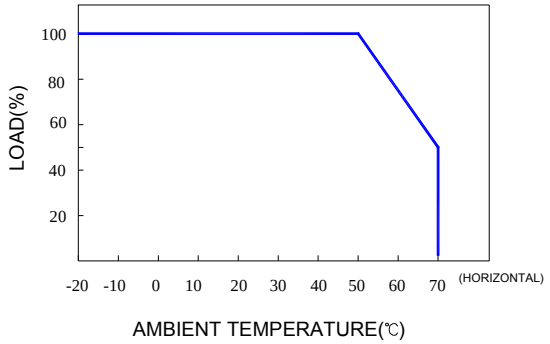

Output De-rating Vs Input Voltage：

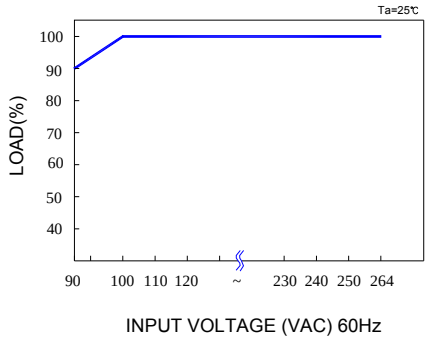

Dimension:

(Unit: mm)

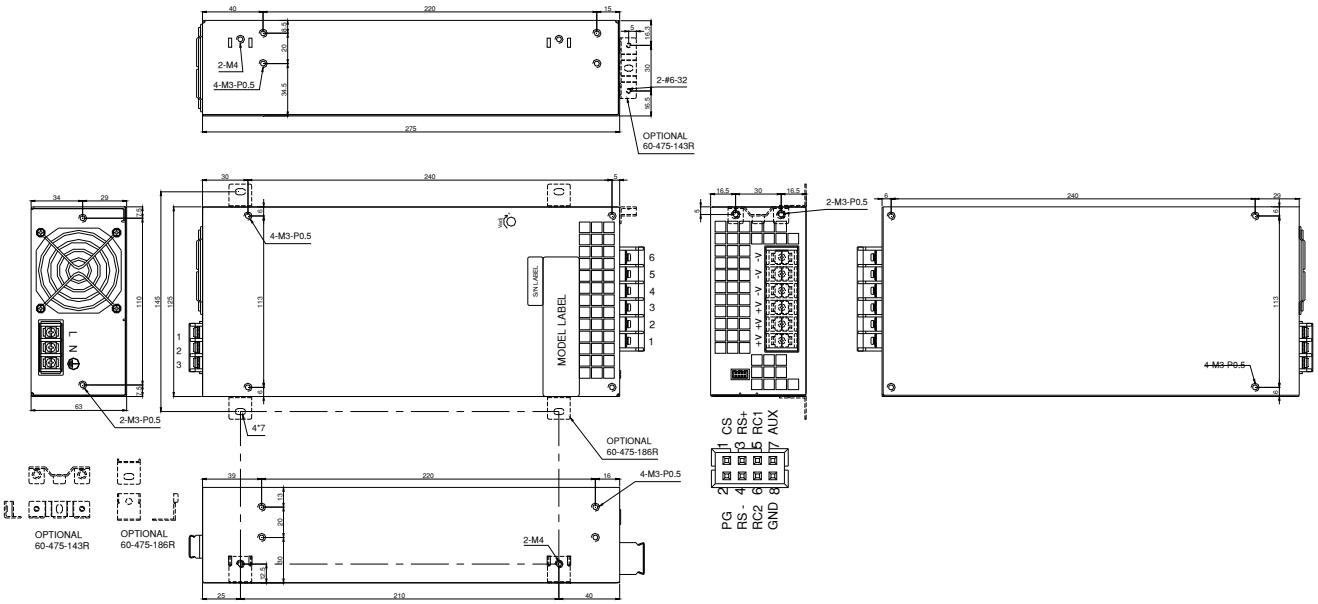

NOTES:

TERMINAL BLOCK CN1：I/P 3P, PITCH 10mm WITCH PC COVER

MODEL No.	1	2	3
SPS-750P-xx	L	N	PE

CN11 O/P 6P, PITCH 11mm

1	2	3	4	5	6
+V	+V	+V	-V	-V	-V

Signal connector CN3：HRS DH21-08DP-2DSA or equivalent

Pin No.	1	2	3	4	5	6	7	8	Mating Housing	Terminal
Assignme	CS	PG	RS+	RS-	RC1	RC2	AUX	GND	HRS DF11-08DS-2C or equivalent	HRS DF11-EP22SCB or equivalent

Copy Right Sunpower Technology Corp. 2009, All Rights Reserved.
Specifications subject to change without notice.

SUNPOWER TECHNOLOGY CORP.
16F.-1, No.150, Jian 1st Rd., Zhonghe Dist., New Taipei City 235, Taiwan (R.O.C.).
TEL: 886-2-8226-3100 FAX: 886-2-8226-3111
http://www.sunpower.com.tw
E-mail: sunpower@sunpower.com.tw

SPS-750P-xx Series

Application Manual
Current sharing with remote sensing:

❶ Parallel operation is available by RS+ and RS- are connected mutually in parallel.

❷ Difference of output voltages among parallel units should be less than 100 mV.

❸ In parallel operation 3 units is the maximum, please consult the manufacturer for applications of more connecting in parallel.

❹ The power supplies should be paralleled using short and large diameter wiring and then connected to the load.

❺ Each output could work within **max load** but must under total **output Max.**

(Total output Max.. at parallel operating **)** ＝ **(max load** per units) X (Number of units) X 0.9

❻ In parallel connection, maybe only one unit (master) operate if the total **output Max**. is less than 10% of **max load** condition.

The other PSUs (slaves) may go into standby mode and their output LEDs will not turn on.

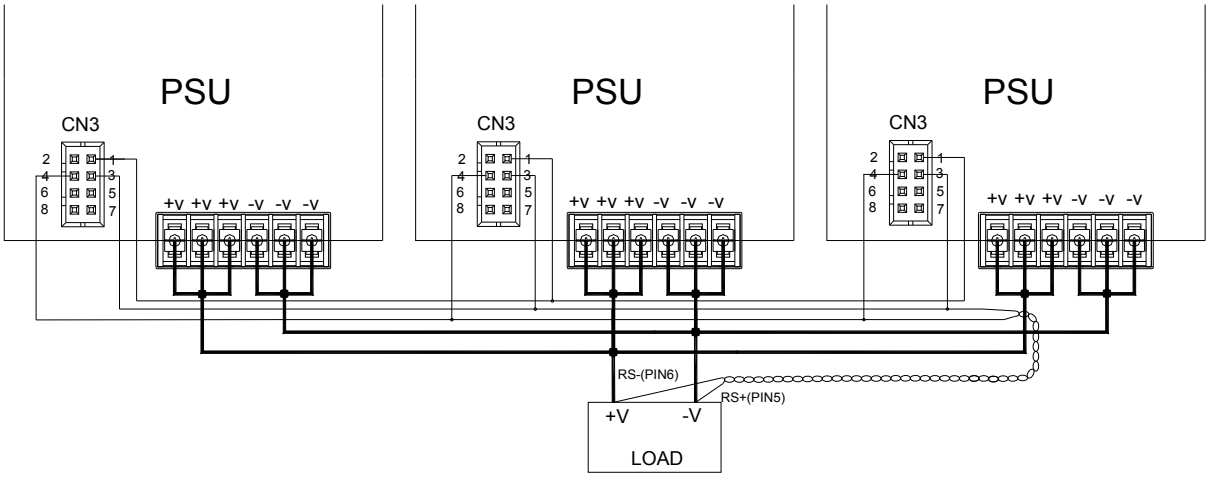

Remote control ON/OFF:

❶ Remote control ON/OFF becomes available by applying voltage in CN3

❷ Table A shows the specification of remote control ON/OFF function

❸ Fig 1 slows the example to connect remote control ON/OFF function

Table A： Specification of remote control ON/OFF

Connection Method		Fig 1-A	Fig 1-B	Fig 1-C
SW Logic	Output ON	SW Open	SW Close	SW Open
	Output OFF	SW Close	SW Open	SW Close

Fig 1 Examples of connecting remote control ON/OFF

Fig 1-A： Using internal 12V auxiliary output	Fig 1-B： Using internal 12V auxiliary output	Fig 1-C：Using external voltage source
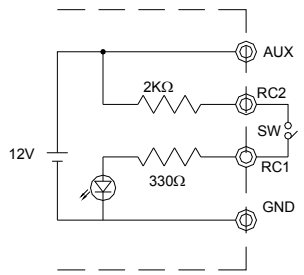	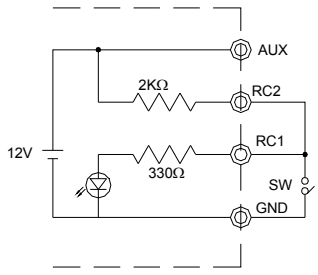	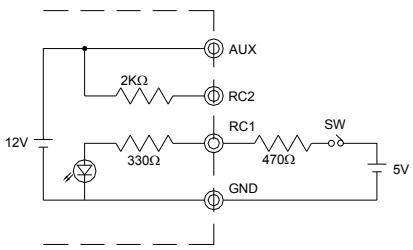

Copy Right Sunpower Technology Corp. 2009, All Rights Reserved.
Specifications subject to change without notice.

SUNPOWER TECHNOLOGY CORP.
16F.-1, No.150, Jian 1st Rd., Zhonghe Dist., New Taipei City 235, Taiwan (R.O.C.).
TEL: 886-2-8226-3100 FAX: 886-2-8226-3111
http://www.sunpower.com.tw
E-mail: sunpower@sunpower.com.tw

SPS-750P-xx Series

Power good signal：

Function	Description	Output
Power good signal	The signal is 〝High〞 when the power supply is above 20％ of the rated output voltage, Power OK	High
	The signal turns to be 〝Low〞 when the power supply is Under 20％ of the rated output voltage, Power Fail	Low

Copy Right Sunpower Technology Corp. 2009, All Rights Reserved.
Specifications subject to change without notice.